30W, AC-DC converter

FEATURES

- Input voltage range: 85 - 305VAC and 100 - 430VDC
- Operating ambient temperature range: -40℃ to +85℃
- Up to 90% efficiency
- No-load power consumption ＜0.1W
- 5000m altitude application
- EMI performance meets CISPR32/EN55032 CLASS B, EN55014
- Meets surge ±2KV without additional circuits
- Over-voltage class Ⅲ (designed to meet EN61558)
- Design to meet IEC/EN/UL62368/EN60335/EN61558 standards

LD30-23BxxR2 series AC-DC converters is one of Mornsun's new generation compact size power converter. It features wide AC input and at the same time accepts DC input voltage, low power consumption, high efficiency, high reliability, reinforced isolation. It offers good EMC performance compliant to IEC/EN61000-4 and CISPR32/EN55032 and meets IEC/EN/UL62368/EN60335/EN61558 standards. The converters are widely used in industrial, power, home appliances, instrumentation, communication and civil applications. For extremely harsh EMC environment, we recommend using the application circuit show in Design Reference of this datasheet.

Selection Guide

Certification	Part No.*	Output Power	Nominal Output Voltage and Current (Vo/Io)	Efficiency at 230VAC (%) Typ.	Capacitive Load (uF) Max.
UL/CE/CB (Pending)	LD30-23B03R2	19.8	3.3V/6000mA	85	6600
	LD30-23B05R2	30	5V/6000mA	86	6600
	LD30-23B09R2	30.6	9V/3400mA	88	4400
	LD30-23B12R2	30	12V/2500mA	90	4400
	LD30-23B15R2	30	15V/2000mA	90	3300
	LD30-23B24R2	31.2	24V/1300mA	88	1000
	LD30-23B48R2	30.2	48V/630mA	90	470

Note: * Use suffix "A2S" for chassis and suffix "A4S" for DIN-Rail mounting.

Input Specifications

Item	Operating Conditions	Min.	Typ.	Max.	Unit
Input Voltage Range	AC input	85	--	305	VAC
	DC input	100	--	430	VDC
Input Frequency		47	--	63	Hz
Input Current	115VAC	--	--	0.75	A
	230VAC	--	--	0.5	
Inrush Current	115VAC	--	25	--	
	230VAC	--	50	--	
Leakage Current	277VAC/50Hz	0.1mA RMS Max.			
Built In Fuse		2A/300V, slow-blow			
Hot Plug		Unavailable			

Output Specifications

Item	Operating Conditions		Min.	Typ.	Max.	Unit
Output Voltage Accuracy	3.3V		--	±3	--	%
	5V/9V/12V/15V/24V/48V		--	±2	--	
Line Regulation	Full load		--	±0.5	--	
Load Regulation	0%-100% load	3.3V	--	±2	--	
		5V	--	±1.5	--	
		9V/12V/15V/24V/48V	--	±1	--	
Ripple & Noise*	20MHz bandwidth (peak-to-peak value)	3.3V/5V/9V/12V/15V	--	--	100	mV
		24V/48V	--	100	150	

Stand-by Power Consumption	230VAC	3.3V/5V/9V/12V/15V/24V	--	0.075	0.1	W
		48V	--	0.12	0.15	
Temperature Coefficient			--	±0.02	--	%/°C
Short Circuit Protection			Hiccup, continuous, self-recovery			
Over-current Protection			⩾110%Io, self-recovery			
Over-voltage Protection	3.3VDC Output		⩽6.3VDC (Output voltage hiccup)			
	5VDC Output		⩽16VDC (Output voltage hiccup)			
	9VDC Output		⩽16VDC (Output voltage hiccup)			
	12VDC Output		⩽16VDC (Output voltage hiccup)			
	15VDC Output		⩽25VDC (Output voltage hiccup)			
	24VDC Output		⩽35VDC (Output voltage hiccup)			
	48VDC Output		⩽60VDC (Output voltage hiccup)			
Minimum Load			0	--	--	%
Hold-up Time	115VAC input		--	10	--	ms
	230VAC input		--	50	--	

Note: *The "Tip and barrel method" is used for ripple and noise test, output parallel 10uF electrolytic capacitor and 1uF ceramic capacitor, please refer to AC-DC Converter Application Notes for specific information.

General Specifications

Item		Operating Conditions	Min.	Typ.	Max.	Unit
Isolation	Input-output	Electric Strength Test for 1min., leakage current <5mA	4200	--	--	VAC
Insulation Resistance	Input - output	At 500VDC	100	--	--	MΩ
Operating Temperature			-40	--	85	°C
Storage Temperature			-40	--	85	
Storage Humidity			--	--	95	%RH
Soldering Temperature		Wave-soldering	260 ± 5℃; time：5 - 10s			
		Manual-welding	360 ± 10℃; time：3 - 5s			
Switching Frequency			--	65	--	kHz
Power Derating		-40°C to -25°C (<115VAC)	1.33	--	--	%/°C
		+50°C to +70°C	2.5	--	--	
		+70°C to +85°C	0.67	--	--	
		85VAC - 100VAC	1.33	--	--	%/VAC
		277VAC - 305VAC	0.72	--	--	
		2000m - 5000m	6.7	--	--	%/Km
Safety Standard			IEC/EN/UL62368/EN60335/EN61558			
Safety Certification			IEC/EN/UL62368/EN60335/EN61558(Pending)			
Safety Class			CLASS II			
Vibration			10 ~ 500Hz, 5G 10min./1cycle, period for 60min. Each along X, Y, Z axes			
MTBF			MIL-HDBK-217F@25°C > 500,000 h			

Mechanical Specifications

Case Material		Black plastic, flame-retardant and heat-resistant (UL94V-0)/Metal
Dimension	DIP package	69.50 x 39.00 x 24.00 mm
	A2S chassis mounting	96.10 x 54.00 x 32.50 mm
	A4S Din-Rail mounting	96.10 x 54.00 x 37.10 mm
Weight	DIP package	100g (Typ.)
	A2S chassis mounting	147g (Typ.)
	A4S Din-Rail mounting	190g (Typ.)
Cooling method		Free air convection

Electromagnetic Compatibility (EMC)

Emissions	CE	CISPR32/EN55032 CLASS B	
		EN55014-1	
	RE	CISPR32/EN55032 CLASS B	
		EN55014-1	
Immunity	ESD	IEC/EN 61000-4-2 Contact ±8KV / Air ±15KV	Perf. Criteria A
		IEC/EN55014-2	Perf. Criteria A
	RS	IEC/EN61000-4-3 10V/m	perf. Criteria A
		IEC/EN55014-2	Perf. Criteria A
	EFT	IEC/EN61000-4-4 ±2KV	perf. Criteria A
		IEC/EN61000-4-4 ±4KV (See Fig.2 for recommended circuit)	perf. Criteria A
		IEC/EN55014-2	perf. Criteria A
	Surge	IEC/EN61000-4-5 line to line ±2KV	perf. Criteria A
		IEC/EN61000-4-5 line to line ±2KV/line to ground ±4KV (See Fig.2 for recommended circuit)	perf. Criteria A
		IEC/EN55014-2	perf. Criteria A
	CS	IEC/EN61000-4-6 10Vr.m.s	perf. Criteria A
		IEC/EN55014-2	Perf. Criteria A
	Voltage dip, short interruption and voltage variation	IEC/EN61000-4-11 0%, 70%	perf. Criteria B
		IEC/EN55014-2	perf. Criteria B

Product Characteristic Curve

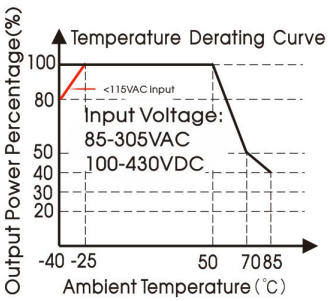

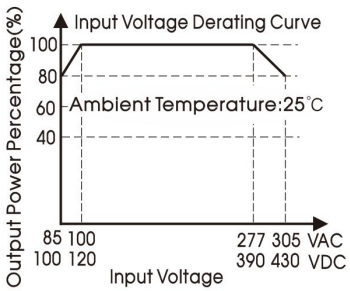

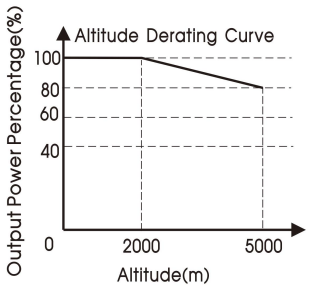

Note: ① With an AC input between 85-100V/277-305VAC and a DC input between 100-120V/390-430VDC, the output power must be derated as per temperature derating curves;
② This product is suitable for applications using natural air cooling; for applications in closed environment please consult factory or one of our FAE.

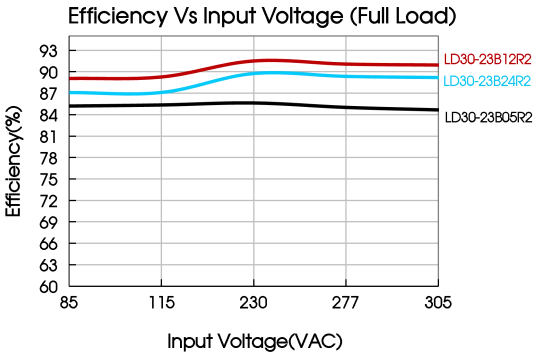

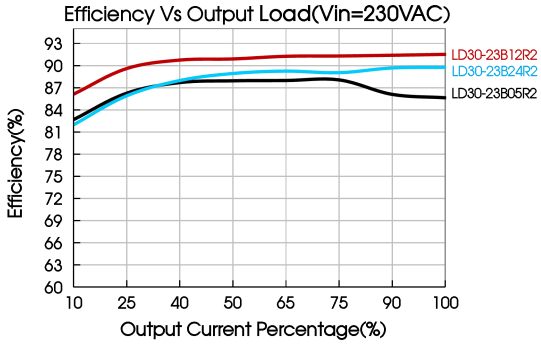

Design Reference

1. Typical application

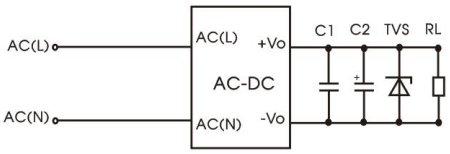

Fig. 1: Typical circuit diagram

Part No.	C1	C2	TVS
LD30-23B03R2	1uF/100V	10uF/50V	SMBJ7.0A
LD30-23B05R2		10uF/50V	SMBJ7.0A
LD30-23B09R2		10uF/50V	SMBJ12A
LD30-23B12R2		10uF/50V	SMBJ20A
LD30-23B15R2		10uF/50V	SMBJ20A
LD30-23B24R2		10uF/50V	SMBJ30A
LD30-23B48R2		10uF/63V	SMBJ64A

Output Filter Components:
① C1 is a ceramic capacitor used for filtering high-frequency noise and TVS is a recommended suppressor diode to protect the application in case of a converter failure;
② This circuit is recommended for indoor use.

2. EMC compliance recommended circuit

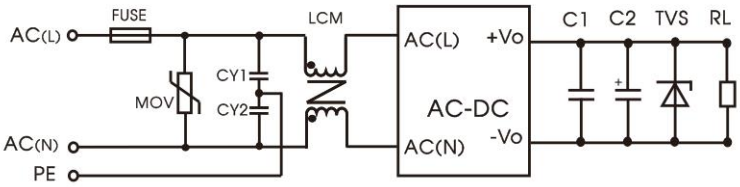

Fig 2: EMC application circuit with higher requirements

Component	Recommended value
FUSE	2A/300V, slow-blow, required
MOV	S14K350
CY1/CY2	1nF/400VAC
LCM	10mH, we recommended using part no. FL2D-Z5-103 (MORNSUN)

Dimensions and Recommended Layout

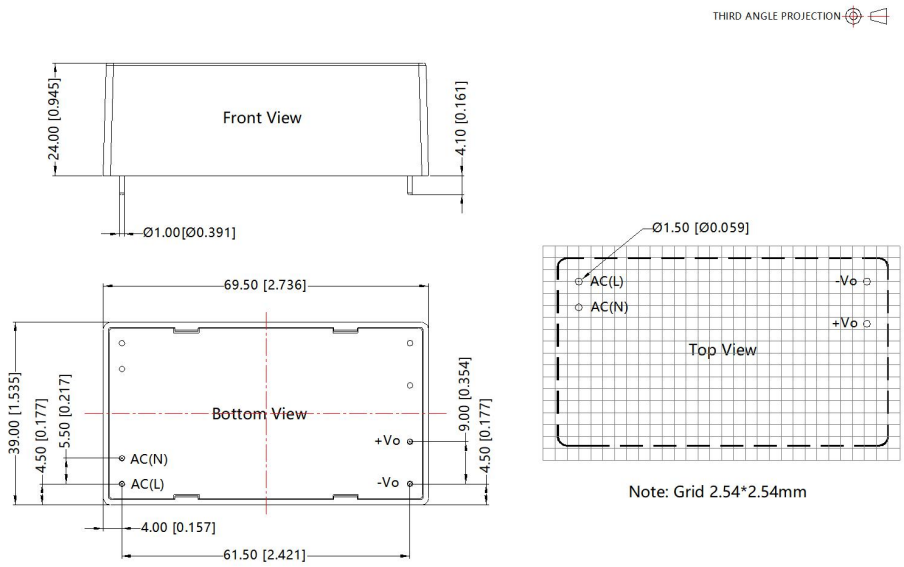

Note:
Unit: mm[inch]
Pin diameter tolerances: ±0.10[±0.004]
General tolerances: ±0.50[±0.020]

A2S Dimensions

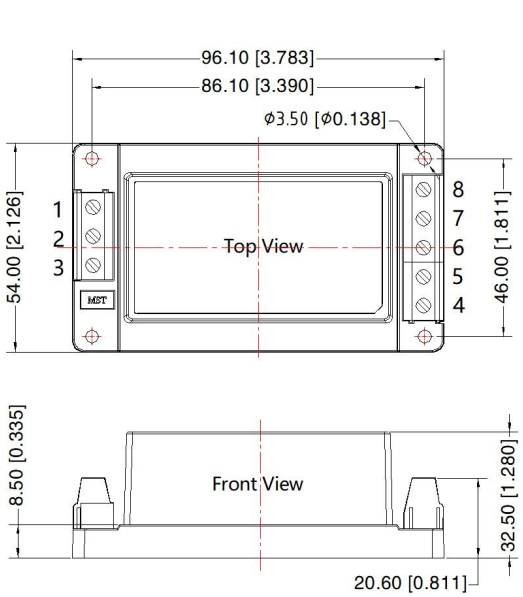

Pin-Out	
Pin	Mark
1	NC
2	AC(N)
3	AC(L)
4	+Vo
5	NC
6	NC
7	NC
8	-Vo

Note:
Unit: mm[inch]
Wire range: 24–12 AWG
Tightening torque: Max 0.4 N · m
General tolerances: ± 1.00[± 0.039]

A4S Dimensions

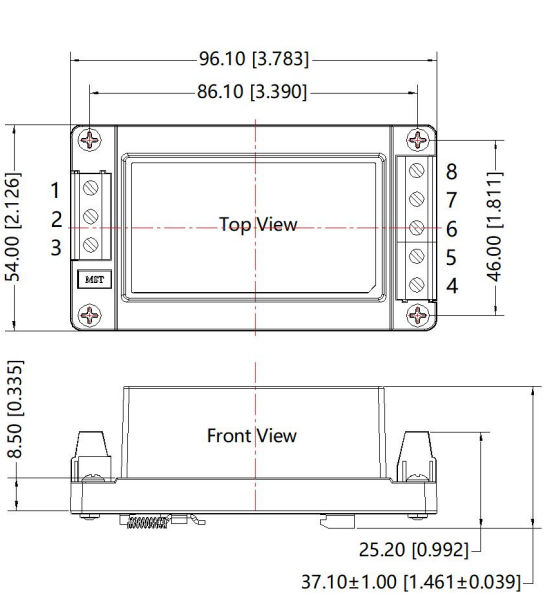

Pin-Out	
Pin	Mark
1	NC
2	AC(N)
3	AC(L)
4	+Vo
5	NC
6	NC
7	NC
8	-Vo

Note:
Unit: mm[inch]
Mounting rail: TS35, rail needs to connect safety ground
Wire range: 24-12 AWG
Tightening torque: Max 0.4 N·m
General tolerances: ±1.00[±0.039]

Note:

1. For additional information on Product Packaging please refer to www.mornsun-power.com. Packaging bag number: 58220193(DIP package); 58220019 (A2S/A4S package);
2. If the product is not operated within the required load range, the product performance cannot be guaranteed to comply with all parameters in the datasheet;
3. Unless otherwise specified, parameters in this datasheet were measured under the conditions of Ta=25℃, humidity<75% with nominal input voltage and rated output load;
4. All index testing methods in this datasheet are based on our company corporate standards;
5. We can provide product customization service, please contact our technicians directly for specific information;
6. Products are related to laws and regulations: see "Features" and "EMC";
7. Our products shall be classified according to ISO14001 and related environmental laws and regulations, and shall be handled by qualified units.

Mornsun Guangzhou Science & Technology Co., Ltd.
Address: No. 5, Kehui St. 1, Kehui Development Center, Science Ave., Guangzhou Science City, Huangpu District, Guangzhou, P. R. China
Tel: 86-20-38601850 Fax: 86-20-38601272 E-mail: info@mornsun.cn www.mornsun-power.com